Combining forces

Upgrading cement grinding systems offers both process and commercial benefits. The use of a high-pressure grinding roll in semi-finish grinding mode significantly reduces specific energy consumption and improves production capacity. But this type of grinding system requires two types of air classifiers, which usually ties up additional investment and space. Therefore, Germany-based Maschinenfabrik Köppern has developed a compact air classifier that enables grinding system upgrades by integrating only one combined machine.

■ *by **Florian Kleemann,** Köppern Aufbereitungstechnik GmbH & Co KG, Germany*

High-pressure grinding rolls (HPGR) have been used in cement production for more than 30 years. Since the first industrial application for comminution in 1985, these highly-efficient machines have gained in importance with their main applications in the grinding of brittle materials.[1] HPGRs were often added upstream to existing cement plants with a ball mill and an air classifier in closed-circuit grinding. This pre-grinding, which partially moves the grinding load from the ball mill into the HPGR, results in savings of specific energy of around 20 per cent compared to simple closed-circuit ball mill (CCBM) grinding. [2]

HPGR in a semi-finish grinding system

Further improvements can be made by using the HPGR in semi-finish grinding mode. This efficient grinding system usually includes an HPGR, a static cascade air classifier downstream for deagglomeration and coarse separation, followed by a dynamic air classifier for fine separation in closed circuit with a ball mill (see Figure 1). Compared to an HPGR in pre-grinding mode, material with suitable product fineness after the first comminution stage in the HPGR is directly removed from the grinding circuit and does not have to pass the ball mill. Overgrinding of already fine material is reduced, which leads to better operational performance of the ball mill. Compared with CCBM, these improvements reduce specific energy consumption by 20-40 per cent.[2,3]

However, a major disadvantage of conventional semi-finish grinding circuits is the necessity of two types of air classifiers (see Figure 1). The dynamic

Figure 1: conventional cement grinding with high-pressure grinding roll (HPGR) in semi-finish mode: 1 – HPGR, 2 – static cascade air classifier, 3 – dynamic air classifier and 4 – ball mill

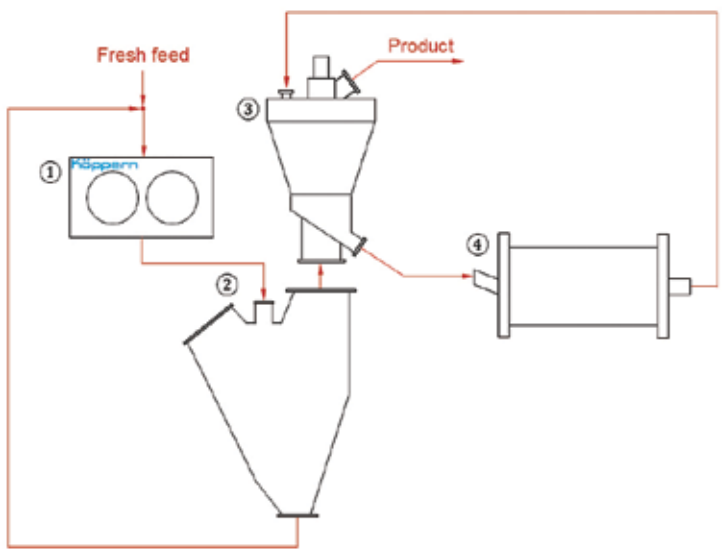

Figure 2: cement grinding with HPGR in semi-finish mode with 2-Stage Koesep air classifier: 1 – HPGR, 2 – 2-Stage Koesep and 3 – ball mill

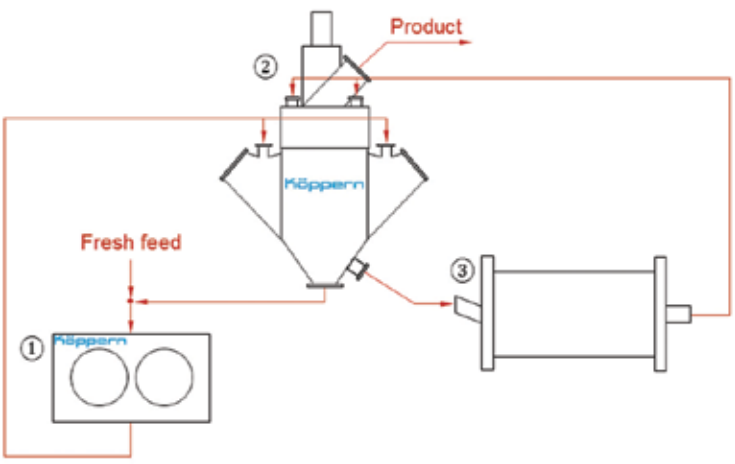

Figure 3: the Köppern 2-Stage Koesep

Figure 4: set-up of Köppern 2-Stage Koesep

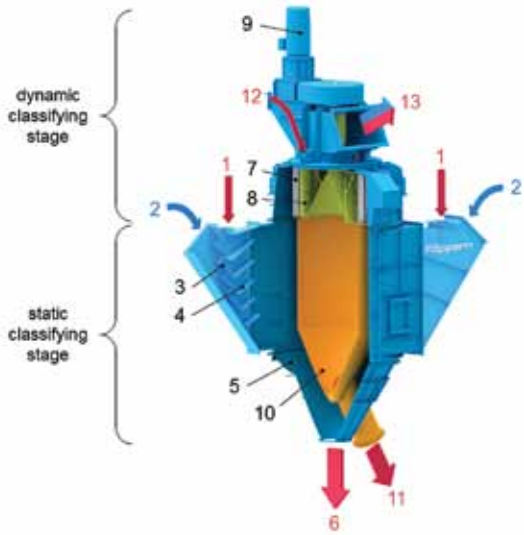

1 – feed (product from HPGR)
2 – primary air inlets
3 – baffle plates
4 – guiding plates
5 – outer cone
6 – coarse discharge → back to HPGR
7 – guide vanes
8 – rotating cage
9 – motor
10 – inner cone
11 – middlings discharge → to ball mill
12 – feed (product from ball mill)
13 – product and air discharge

classifier is usually arranged on top of the static classifier, which requires a larger space.

To avoid this, Köppern developed the 2-Stage Koesep air classifier.[4-5] This enables cement producers to use an HPGR in semi-finish grinding mode requiring only one air classifier (see Figure 2). It combines deagglomeration of the HPGR product, coarse separation in a static cascade classifier and fine separation in a high-efficiency air classifier. All classifier functions are installed within one compact housing (see Figure 3). This makes the 2-Stage Koesep classifier well suited to upgrading existing grinding plants with a CCBM or an HPGR in pre-grinding mode to semi-finish grinding systems.

In both cases an increase in grinding plant capacity and additional savings of specific energy consumption will be achieved.

Set-up and operation of the 2-Stage Koesep air classifier

The 2-Stage Koesep classifier consists of two main sections: the static cascade and the dynamic high-efficiency air classifying stage (see Figure 4). The product of the HPGR passes through the inlets (1) into the static stage. It is crossed by the primary separating air (2). The feed falls down and impacts on baffle plates (3) and guiding plates (4) for deagglomeration. The coarse rejects of the static stage move downwards through the outer cone (5) and are discharged at the outlet (6). This material is led back to the HPGR for re-grinding. Fines are carried upwards by the airstream and enter the dynamic section of the 2-Stage Koesep classifier. Here the material passes through guiding vanes (7) before reaching the rotating cage (8) driven by the motor (9).

Caused by the different ratio of forces, coarse grains are rejected due to higher centrifugal forces whereas fine particles pass the rotating cage. The rejected material falls through the inner cone (10) and is discharged as middlings at outlet (11). This material is led to the ball mill. The ball mill discharge is directly fed on top of the rotating cage at inlet (12) for dispersion. All material with product

Figure 5: a 2-Stage Koesep is installed at an Austrian cement plant

Figure 6: upgraded grinding system at an Austrian cement plant: HPGR in semi-finish grinding mode with the Köppern 2-Stage Koesep (former air classifier remains available as back-up system)

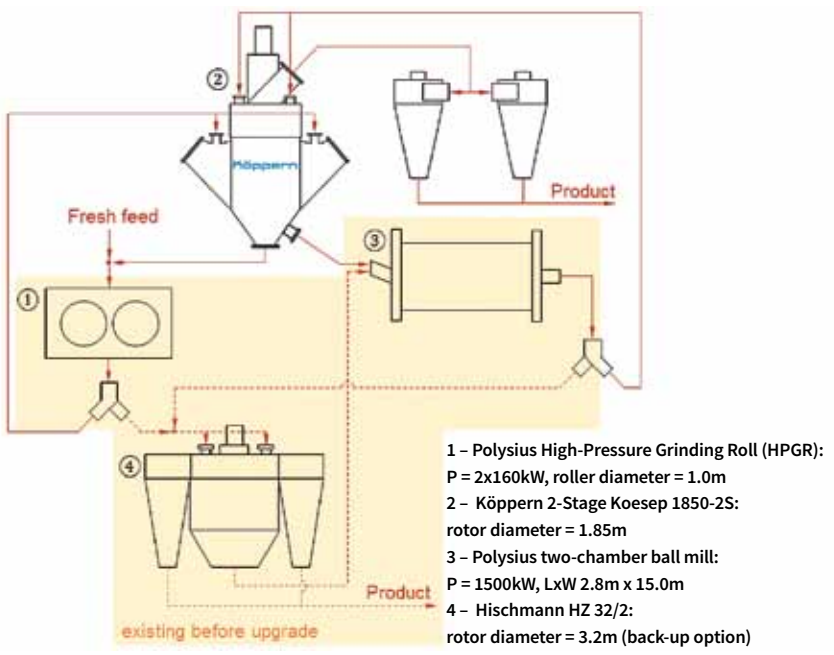

fineness leaves the 2-Stage Koesep classifier at outlet (13) together with the separation air. For both classifying stages only one fan is necessary.

This set-up is patented in Germany[4] and Europe,[5] with patents pending in additional countries. While the compact 2-Stage Koesep air classifier was mainly developed for cement production with an HPGR working in semi-finish grinding circuits and a downstream ball mill, it can also be adapted to systems with only one HPGR in finish-grinding mode or even single ball mill units.

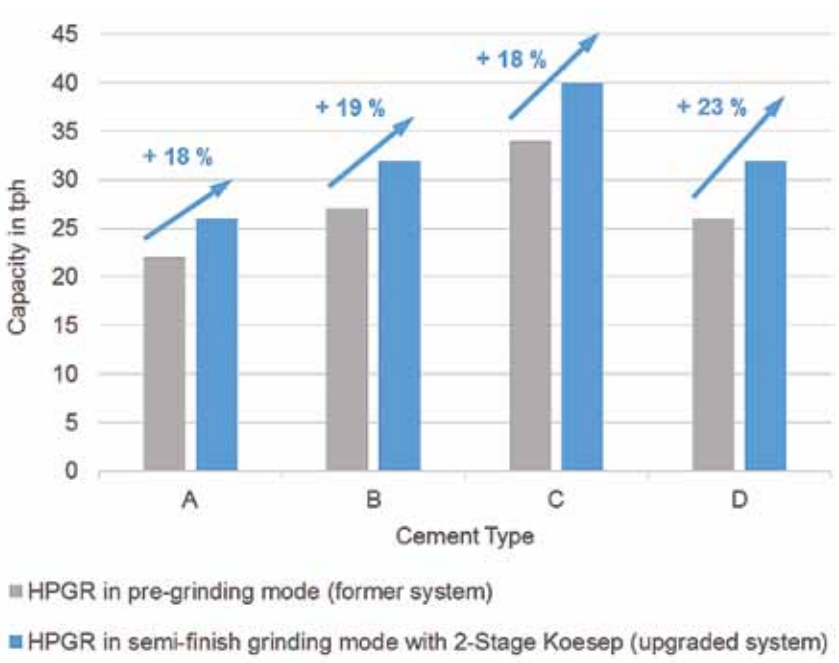

Figure 7: capacity increase by upgrading an HPGR in pre-grinding mode into semi-finish grinding mode with 2-Stage Koesep using the example of a cement plant in Austria

"One of the most efficient cement grinding technologies is an HPGR operating in combination with a classifying system in semi-finish grinding mode. To reduce the large space usually required for the air classifiers, Köppern has developed the 2-Stage Koesep."

Case study: grinding upgrade at Austrian cement producer

An Austrian medium-sized cement manufacturer, which produces both standard cements and highly-specialised building materials, upgraded its grinding unit in 2015 with a 2-Stage Koesep system.

Prior to this upgrade, an HPGR was used in pre-grinding mode with partial flake recycle in combination with a downstream ball mill in closed circuit with a dynamic air classifier. The modernisation aimed to reduce the grinding system's energy consumption as well as its CO_2 footprint, while at the same time increasing production capacity. The operation of the HPGR was changed to semi-finish grinding using the Köppern 2-Stage Koesep classifier (Figure 5).

To maintain a high productivity rate at the cement plant during the project implementation it was important that the old grinding system continued operation. Therefore, two splitters were installed which allowed the operators to switch between the former and the upgraded system (Figure 6). Hence, most of the erection could be accomplished while production was running at full capacity on the old system. As a result the downtime of the plant during the whole upgrade totalled just 40h.

The changeover of the different cement types from the former to the new grinding system went smoothly without major issues. Following a short testing period, the correct settings were determined and the same product quality was achieved, which shows that the 2-Stage Koesep classifier has a fully reproducible performance. This

Figure 8: construction height of comparable combined air classifying systems for a 45tph cement plant: conventional combination of static and dynamic air classifier (left) and the Köpper 2-Stage Koesep 1850-2S

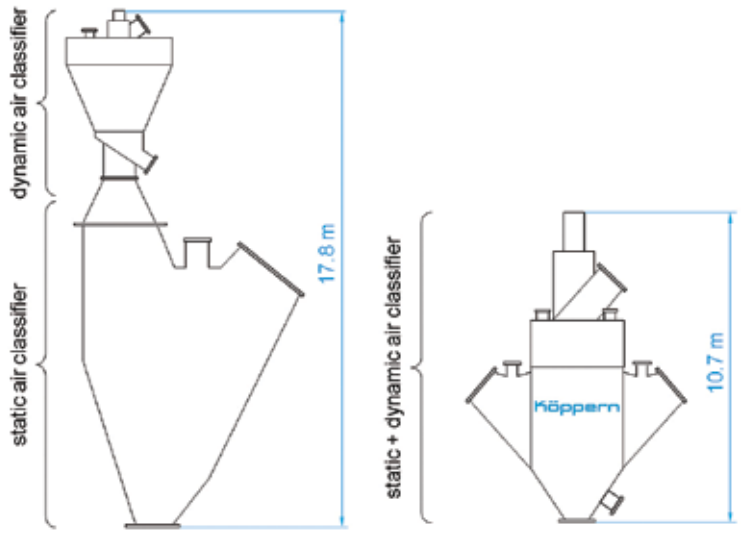

reduces waste when the cement producers switch between different cement types.

To further improve the grinding performance of the plant, the ball charge gradation of the ball mill was also optimised. The existing HPGR was not modified.

The installation of the 2-Stage Koesep classifier and the related optimisation a year prior has resulted in both increased capacity and reduced specific energy consumption. Figure 7 shows the average capacity improvements for four different cement types. While specific energy consumption of the grinding circuit is reduced by around 13 per cent, the system's capacity increased by 19 per cent.

In addition to the improvements in productivity and operational efficiency, the 2-Stage Koesep classifier saves construction and investment costs due to its compact design. For 45tph grinding systems, such as in the case of the Austrian cement plant, the height of a conventional combined air classifying system is around 17.8m. In comparison, the overall height of the 2-Stage Koesep set-up is only 10.7m – around 40 per cent less (see Figure 8). This results in significant savings in the construction of the grinding system as well as in terms of conveyors that take the material to and from each unit.

Conclusion

Cement producers seek to reduce their energy consumption by improving production technology. In grinding circuits the largest energy consumers are mills and air classifiers with their main drives and fans. Therefore, an upgrade of these units offers great potential for improvement.

One of the most efficient cement grinding technologies is an HPGR operating in combination with a classifying system in semi-finish grinding mode. To reduce the large space usually required for the air classifiers, Köppern has developed the 2-Stage Koesep.

This compact air classifier combines desagglomeration of the HPGR products, coarse separation in a static cascade air classifying stage and fine separation in a dynamic high-efficiency air classifier. Additional benefits include a much lower height and thus savings in construction and investment costs. A recent case study has shown energy consumption is significantly reduced while capacity is considerably increased.

Its compact design is well suited for upgrading existing grinding plants with a minimum of plant downtime. Particularly interesting is the modernisation of existing closed-circuit ball mill grinding circuits or HPGRs in pre-grinding mode. ■

REFERENCES

[1] HANSTEIN, T (2001) *Beitrag zur Erhöhung der Standzeit der Arbeitsorgane von Gutbett-Walzenmühlen*. Dissertation 2001. Technische Universität Bergakademie Freiberg

[2] GÜNTER, H, MÜLLER, M AND SONNTAG, P (1996) The application of Roller Presses for High Pressure Comminution. Paper presented at the *Symposium on Grinding Processes Toulouse,* France, 14-15 February.

[3] SÜßEGGER, A (2004) Neue Erkenntnisse und Betriebserfahrungen mit dem VSK®-Sichter. In: *ZKG International,* Vol 57 (2), p64-69.

[4] GÜNTER, H, HANSTEIN, T, NEUMANN, E AND DE WELDIGE E (2014) *Vorrichtung zum Sichten von körnigem Gut und Mahlanlage.* DE 10 2011 055 762 B4.

[5] GÜNTER, H, HANSTEIN, T, NEUMANN, E AND DE WELDIGE, E (2016) *Device for classifying grainy products*. EP 2 785 472 B1.

International Cementreview

SUBSCRIPTION PACKAGE INCLUDES:

- ✓ **12 ISSUES OF INTERNATIONAL CEMENT REVIEW (ICR)** – the cement industry's leading monthly publication, delivered direct to your desk by 1st Class Airmail with early access via CemNet.com. Each issue of ICR includes market reports, technical articles, informed commentary and much more...
- ✓ **FREE HANDBOOK!** Choose either the *Cement Plant Environmental Handbook, 2nd Edition* or *The Cement Plant Operations Handbook, 6th Edition* (fully-revised).
- ✓ **BUILDING BULLETIN NEWSLETTER** Monthly newsletter covering the latest developments in the building materials sector – complimentary to all ICR subscribers.
- ✓ **ICR SUBSCRIBER DISCOUNTS** on all other reference works published by ICR.

Annual subscription rates:
GBP 195 / USD 315 / EUR 260

PLUS

Unlimited access to CemNet.com the leading industry website

- Full digital issues of ICR available in advance of the print edition
- Over five years of online back issues
- Daily news service and 12-year searchable ICR news database
- Access to Corporate Watch and Market Reports section
- Cement Plant Directory
- Video presentations

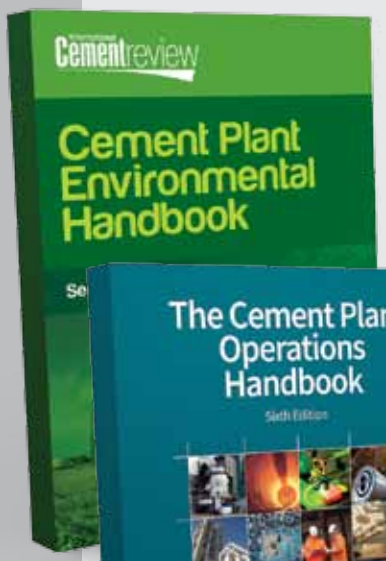

Choice of a FREE handbook

For further information or to subscribe, please contact:

Tel: **+44 (0) 1306 740 363**
Fax: **+44 (0) 1306 740 660**
Email: **subscribe@CemNet.com**
Website: **www.CemNet.com/subscribe**

Daily and weekly newsletters

cemnet

Available on the App Store

Google play

www.CemNet.com

Delivering business insight, market knowledge and technical expertise to the global cement industry